REV	ECO	REV BY	DATE	APPD	DATE
					1.9.2020

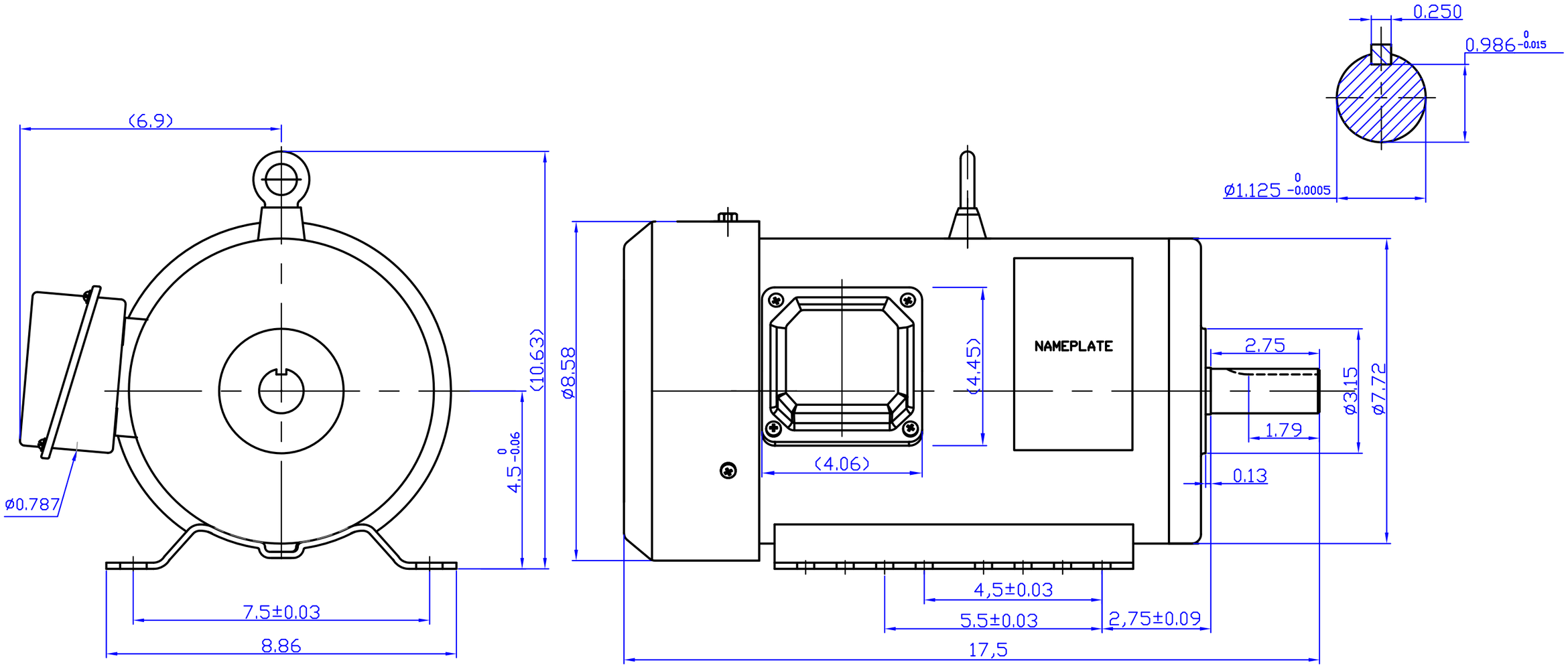

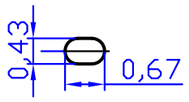

IND #	FRAME	HP	VOLTS	Hz	RPM	S.F	DUTY	ENCL.	PH
TC54	184T-4	5	575	60	1800	1.15	CONT.	TEFC	3
TU54	184T-4	5	208-230/460	60	1800	1.15	CONT.	TEFC	3

DR BY:	2020-01-09	AG-I MOTORTEC INC.,
APPD:		DESCRIPTION
FIRST ANGLE PROJECTION	EDS DATE / VERSION REV4	OUTLINE FOR 184T (5HP-4) F1 MOUNTING
CONFIDENTIAL PROPERTY OF GW ELECTRIC (SHANGHAI) CORPORATION AND ARE NOT TO BE DISCLOSED, DUPLICATED, OR OTHERWISE USED WITHOUT THE WRITTEN CONSENT OF GE ELECTRIC (SHANGHAI) CORPORATION, OR ITS AGENT, AG-I MOTORTEC INC. -ALL RIGHTS RESERVED.		SIZE A3 / DWG NO
		SCALE 1:2 / SHEET