REV	ECO	REV BY	DATE	APPD	DATE

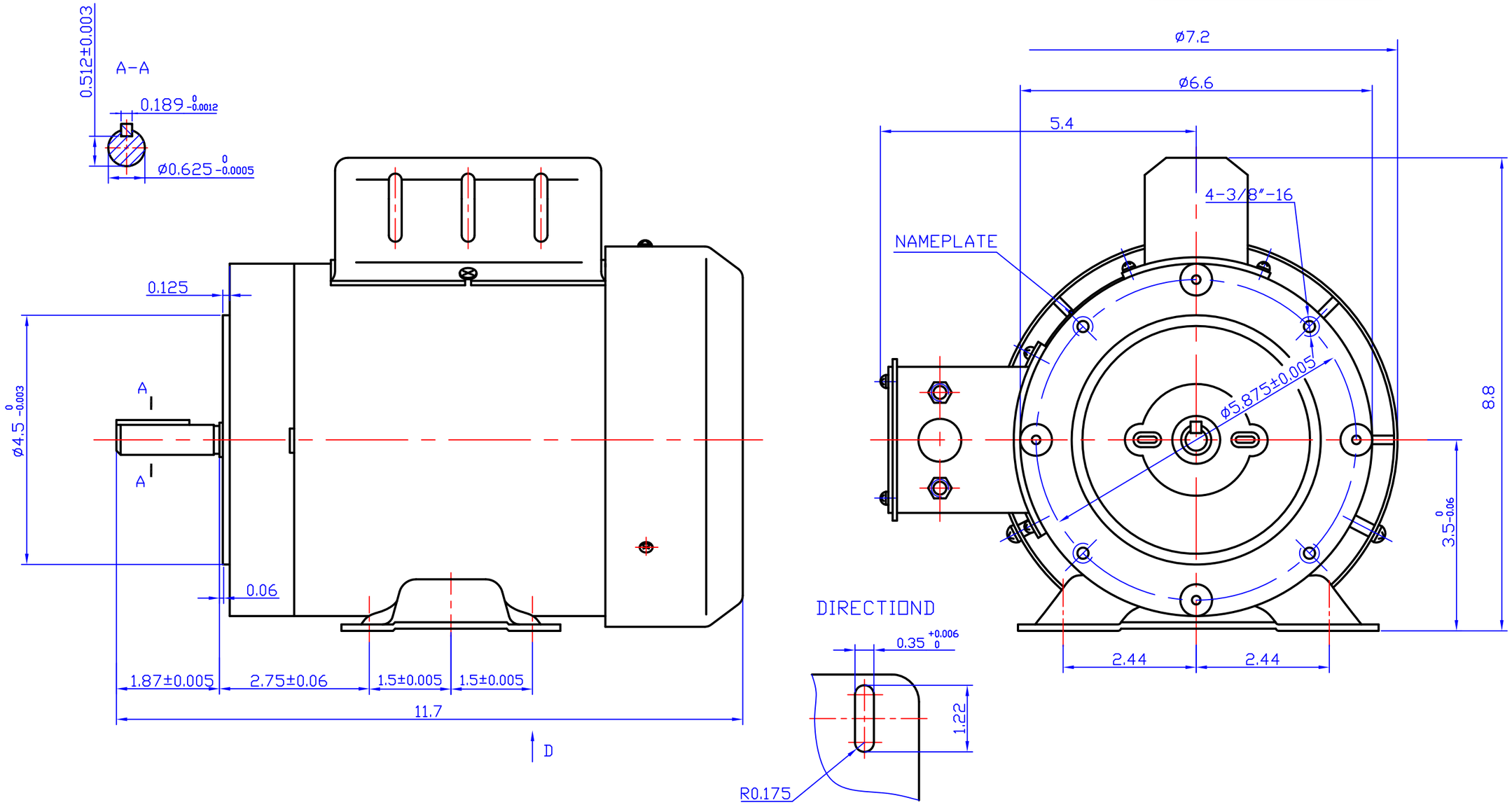

IND #	AG-I MODEL .No.	FRAME	HP	VOLTS	Hz	RPM	PH	S.F.	INSL.	Thermally Protector	endclose	DUTY
C142C	C102DF5FM00	56C	1	115/230	60	3450	1	1.15	F	CED2797	TEFC	CONT.

FARM DUTY	IND# C142C				TEFC
HP 1.0	REF. NO. C102DF5FM00		V 115		V 230
HZ 60	RPM 3450	P.F. 77	FLA 11.4		FLA 5.7
PH 1	MAN. THERMALLY PROTECTED	CED2797	EFF% 70	SFA 13.1	SFA 6.55
FRAME 56C	DUTY CONT.	DES.	P1 P2 T3 T8 T2 T4 T5 / P1 P2 T2 T3 T8 T4 T5		
TYPE C	MAX. AMB. °C 40	S.F. 1.15	L1 L2 L1 TAPE L2		
DATE	INS. CLASS F	CODE	C.C.W. ROTATION FACING LEAD END. INTERCHANGE LEADS T5 & T8 FOR C.W.		

AG-I MotorTec Inc., East Garafraxa, ON,Canada L9W 7L8 GW ELECTRIC (SHA) Made in China

DR BY: Xiaoli Ma

APPD:

FIRST ANGLE PROJECTION

EDS DATE 5.16.2024

VERSION

CONFIDENTIAL PROPERTY OF GW ELECTRIC (SHANGHAI) CORPORATION AND ARE NOT TO BE DISCLOSED, DUPLICATED, OR OTHERWISE USED WITHOUT THE WRITTEN CONSENT OF GW ELECTRIC (SHANGHAI) CORPORATION, OR ITS AGENT, AG-I MOTORTEC INC.
- ALL RIGHTS RESERVED

AG-I MOTORTEC INC.,

DESCRIPTION

C142C OUTLINE

SIZE A3

DWG NO

SCALE 1:2

SHEET